STREET LIGHTS

LIGHTS ARE TO HAVE 200W
LOCATED BALLAST LUMINAIRES
AND ARE TO BE CONNECTED AT 240 VOLTS. CONTRACTOR TO BRING MINIMUM # 2 TPX TO SPLICE BOX ON S/E CORNER OF C.E DIXON AND AIRPORT WAY AND CONNECT TO EXISTING STREET LIGHT SYSTEM IN SPLICE BOX.

CAUTION

HAVE ALL AREAS USA'ED
PADS CAN NOT BE INSTALLED
OVER SUBSURFACE FACILITIES.

EXACT LOCATION OF PAD AND BOX
TO BE DETERMINED IN FIELD.
CALL U.S.A. TO IDENTIFY
EXISTING SUBSURFACE FACILITIES

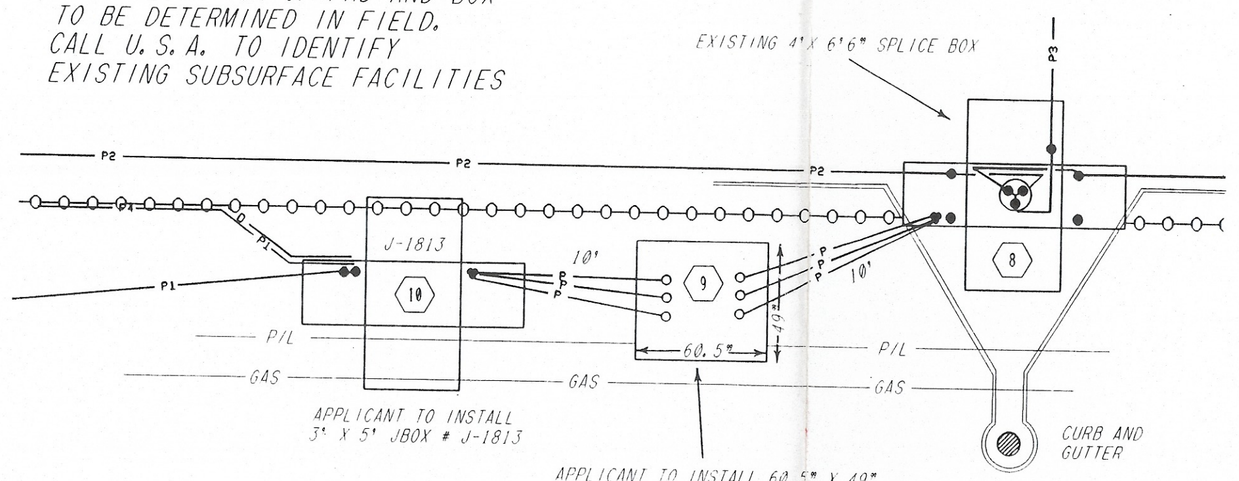

APPLICANT TO INSTALL
3' X 5' JBOX # J-1813

APPLICANT TO INSTALL 60.5" X 40"
PMH-4 PAD PER DWG 053318.
P G & E TO INSTALL PMH-4
14549 WITH 50 E FUSES.

LAND DEPT. TO SECURE
RIGHT OF WAY TO COVER
PMH-4 PAD AND ANY PRIMARY
PRIMARY CONDUIT OF CABLE
ON PRIVATE PROPERTY.

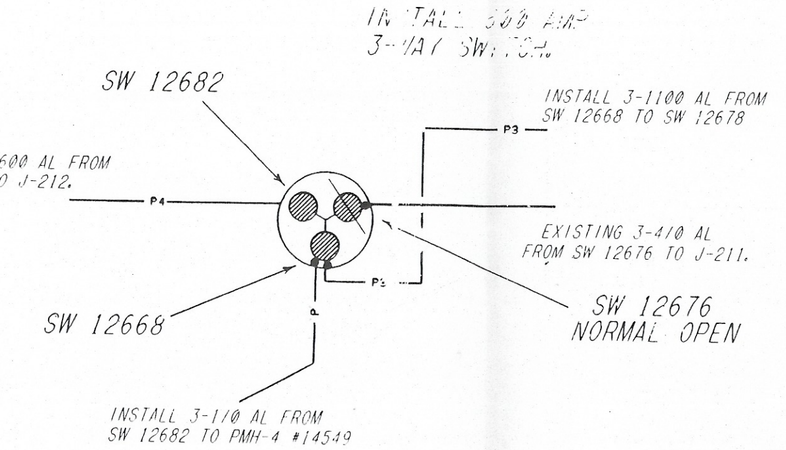

INSTALL 3-600 AL FROM
SW 12682 TO J-212.

INSTALL 3-1100 AL FROM
SW 12668 TO SW 12678

EXISTING 3-410 AL
FROM SW 12676 TO J-211.

INSTALL 3-1/0 AL FROM
SW 12682 TO PMH-4 #14549

MATCH TO LINE
SHEET 3

REMOVE IDLE FACILITIES

TIDEWATER SOUTHERN R.R

3 - # 6 C 12 KV

REMOVE 200' 3 - # 6 C

REMOVE C.O.D 1137

REMOVE 150' 3 - # 2 AL

INSTALL ST. LT.
23907.

J-207

REMOVE 100' 3 - # 2 AL.

INSTALL ST. LT.
23913.

P G & E TO REPLACE 237'
3-410 AL IN 5" DUCT WITH
3-600 AL.
REPULL 235' 3 - # 2 AL
IN 5" DUCT.
131 LBS PULL.

INSTALL ST. LT.
23914.

220'(237')
208'(235')

SEE DETAIL

APPLICANT TO TRENCH AND INSTALL
1 - 3" DUCT 30' TO MAIN.
P G & E TO PULL ONE SET (44')
350 OPX AL SERVICE. # 18 LBS PULL.

P G & E TO REPLACE 489'
3-410 AL IN 5" DUCT WITH
3-600 AL. # 1052 LBS PULL.
INSTALL 472' 3 - 1/0 AL
AL IN EMPTY 5" DUCT.
261 LBS PULL.

INSTALL ST. LT.
23910.

APPLICANT TO TRENCH AND INSTALL
1 - 4" DUCT 112' TO PAD.
P G & E TO PULL 129' 3 - 1/0
AL PRIMARY. # 87 LBS PULL.

INSTALL ST. LT.
23908.

SEE DETAIL
ABOVE

T-12313

FUMP HOUSE

160'

125'

2.0 VD
600 AMP
277/480
22,000 SCI

1.0 VD
600 AMP
277/480
22,000 SCI

REMOVE 152'
6 - # 2 AL PRI.
INSTALL 154'
3 - 1/0 AL PRI.

T-2582
150

APPLICANT TO TRENCH AND INSTALL
2 - 5" DUCTS 160' TO MAIN.
P G & E TO PULL ONE SET (174')
1000 OPX AL SERVICE. # 108 LBS PULL.

APPLICANT TO TRENCH AND INSTALL
2 - 5" DUCTS 125' TO MAIN.
P G & E TO PULL ONE SET (139')
1000 OPX AL SERVICE. # 132 LBS PULL.

P G & E TO TRENCH AND INSTALL
1 - 6" DUCT 380' TO BOX.
P G & E TO PULL 405' 3 - 1100
AL PRIMARY. # 1159 LBS PULL.

INTERCEPT EXISTING
6" DUCT.

265'

AIRPORT WAY

MATCH TO LINE
SHEET 1

INSTALL ST. LT.
23907.

INSTALL ST. LT.
23908.

EXISTING STREET LIGHT

2 TPX ST. LT. SCI.

W - 11 - 9
W - 11 - 10

CAUTION HAVE U.S.A.'ED

P G & E TO SET 3' X 5'
JBOX # J-1816
FINAL LOCATION OF BOX TO
BE DETERMINED IN FIELD
DUE TO EXISTING SUBSURFACE
FACILITIES.
CONSTRUCTION TO VERIFY CONDUIT
ROUTES AND DIRECTIONS.

REMOVE 6 - # 2
AL IDLE PRIMARY
TO J-207

REMOVE EXISTING 4' X 6'6" SPLICE BOX
REMOVE 3-WAY SWITCH # 3800 & 3878.
REMOVE EXISTING 3 - 410 AL PRIMARY
AND SPLICE EXISTING 5" DUCT STRAIGHT
THROUGH ONCE BOX IS REMOVED. THEN PROVIDE
FILL, AND ASPHALT.

REMOVE 3 - # 2 AL
TO SPLICE BOX

J-1816

7'

INTERCEPT 5" DUCT AND
INSTALL 4" DUCT TO NEW BOX
INSTALL 3 - 1/0 AL FROM
J-1816 TO J- 1813.

INTERCEPT 5" DUCT WITH SWEDGE
REDUCER, AND INSTALL 4" DUCT
TO NEW BOX, AND REPULL 3 - # 2 AL.

INTERCEPT 4" DUCT AND
3 - # 2 AL, INSTALL 4"
DUCT TO NEW BOX AND REPULL
3 - 1/0 ALL TO T-5717.

REMOVE 3 - # 2 AL
TO T-5717.

(12) INSTALL
11E PM LB 300
T-12313

12/21Y/12 277/480
3178378 - 50742
EST. DEM 475 KVA 3 Ø
60% LF

APPLICANT TO INSTALL
300-1000 kVA STYLE 11E
TRANSFORMER PAD
PER DWG. 045292

FIXED BARRIER POSTS
PER DWG. 051122

DETAIL LOCATION 12

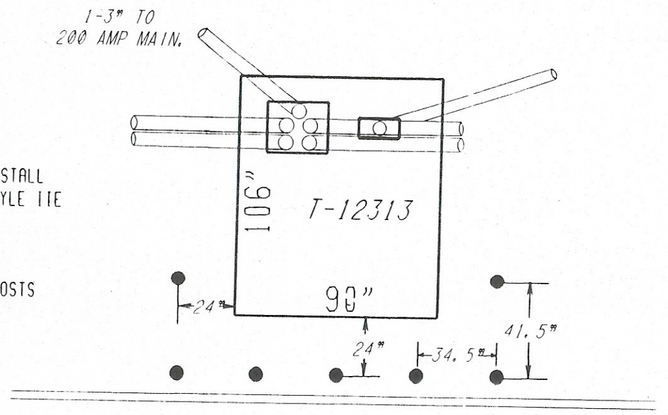

LEGEND

INSTALL	DESCRIPTION
P	PRIMARY CONDUCTOR/CABLE - INSTALL 1/0 AL & 2" DUCT
P1	PRIMARY CONDUCTOR/CABLE - INSTALL 3 - 1/0 AL & 4" DUCT
P2	PRIMARY CONDUCTOR/CABLE - INSTALL 3 - 600 AL IN 5" DUCT
P3	PRIMARY CONDUCTOR/CABLE - INSTALL 3 - 1100 AL & 6" DUCT
P4	PRIMARY CONDUCTOR/CABLE - INSTALL 3 - 1/0 AL IN 5" DUCT
SV	SERVICE CONDUCTOR/CABLE - INSTALL 350 AL TPX & 3" DUCT
SV2	SERVICE CONDUCTOR/CABLE - 1000 OPX & 2 - 5" DUCTS
D1	EMPTY DUCT - INSTALL 4" DUCT

INSTALL	DESCRIPTION
[*]	3' X 5' PRIMARY BOX
▲	PADMOUNT TRANSFORMER - SIZE AS SHOWN
	PMH4
•	RISER
■	CUSTOMER OWNED ELECTROLIER
	3-WAY 3-WAY SWITCHED LBOR

SUMMER INTERIOR	
INSUL. DIST.	B
LTG. AREA	3
VOLT. AREA	2
LOADING	L

CA: 1-800-642-2400
CALL BEFORE YOU DIG
USA
UNDERGROUND SERVICE ALERT

NO.	DATE	DESCRIPTION	GM/SPEC	DWN.	CHKD.	SUPV.	APVD.	BY	NO.	DATE	DESCRIPTION	GM/SPEC	DWN.	CHKD.	SUPV.	APVD.	BY

REVISIONS REVISIONS

APPROVED BY

SJ 7013368
SUPV. AWD
DSGN. RSG
DWN. RSG
CHKD. MFL
D.K.
DATE 05/11/98
SCALE 1"=40'

Suzz Oats Enterprise
Airport Way @ C.E.Dixon'S
Stockton

PACIFIC GAS AND ELECTRIC COMPANY
SAN FRANCISCO, CALIFORNIA

BILL OF MATL	
DWG LIST	E078182
SUPSDS	
SUPSD BY	
SHEET NO. 20F3	SHEETS
0731E07818	REV.